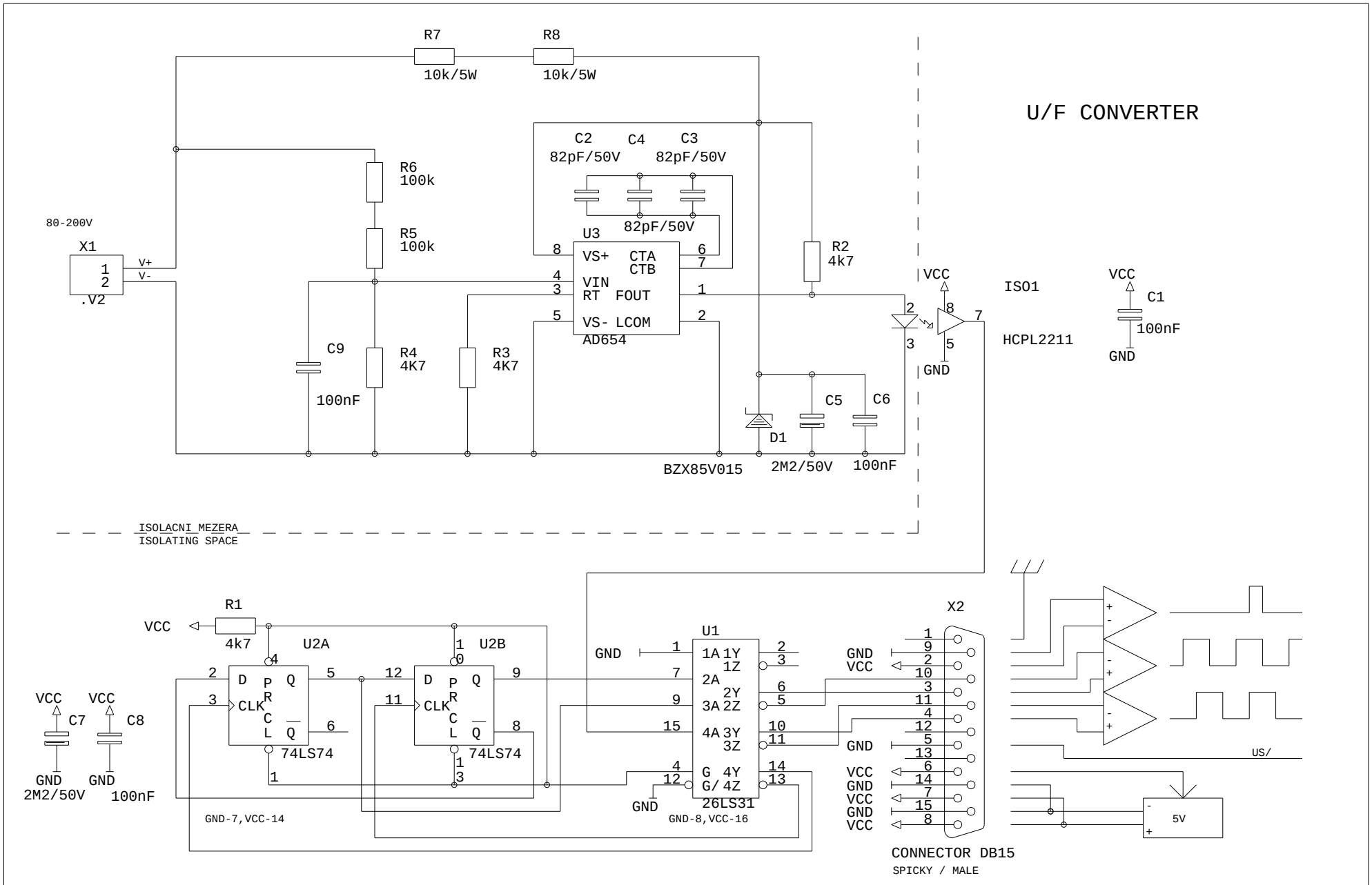

MEFI s.r.o.		
Size A	Document Number VFCONV	REV
Date: September 14, 2000	Sheet 1 of 1	